IEC Low Voltage General Purpose Protection

NH fuse-links Plain blades

Sizes 000 to 3 gG 400VAC from 2 to 630A

Data Sheet

The NH system is classified among plug-in fuse systems and is composed of:

- fuse-base, (possibly including terminal covers and phase barriers)
- fuse-link with blade contact
- fuse-link replacement device (LV HRC fuse puller)

Since the design of this system cannot guarantee non-interchangeability of rated current, it must be handled by a qualified professional.

Benefits

Dimensions according to DIN 43 620 Parts 1 to 4 standard

Non-isolated gripping lugs

Double indicator

Lead free contact blades

0% cadmium

Applications

gG: general purpose cable and line protection

Approvals

DIN 57636 Part 201

VDE 0636 Part 201

IEC 60269-1 and -2

Related products

Fuse-holders: NH fuse bases

NH fuse switch disconnectors

Beige: melted

Red: non melted

Contact : ts.sbm@mersen.com or +33 4 26 29 29 29
www.ferrazshawmut.mersen.com

IEC Low Voltage General Purpose Protection

NH fuse-links Plain blades

Sizes 000 to 3 gG 400VAC from 2 to 630A

Sizes 000 to 3

Size	Rated Voltage (V)	Nominal Current (A)	Watts Loss @ 100% In (W)	Previous reference	Catalog Number	Reference Number	Weight (g)	Pack.
000	400	2	3.3	1A613.	NH000GG40V2	Z223674	120	3
000	400	4	1.35	1A619.	NH000GG40V4	A223675	120	3
000	400	6	1.7	1A623.	NH000GG40V6	B223676	120	3
000	400	10	1.0	1A631.	NH000GG40V10	C223677	120	3
000	400	16	1.8	1A635.	NH000GG40V16	D223678	120	9
000	400	20	2.0	1A637.	NH000GG40V20	E223679	120	9
000	400	25	2.4	1A639.	NH000GG40V25	F223680	120	9
000	400	32	2.6	1A643.	NH000GG40V32	G223681	120	9
000	400	35	3.2	1A645.	NH000GG40V35	H223682	120	9
000	400	40	3.1	1A647.	NH000GG40V45	J223683	120	9
000	400	50	3.5	1A651.	NH000GG40V50	K223684	120	9
000	400	63	4.6	1A655.	NH000GG40V63	L223685	120	9
000	400	80	5.0	1A659.	NH000GG40V80	M223686	120	9
000	400	100	5.5	1A663.	NH000GG40V100	N223687	120	9
00	400	125	8.6	1A765.	NH00GG40V125	E223702	180	3
00	400	160	9.6	1A769.	NH00GG40V160	F223703	180	3
1	400	35	3.9	1A145.	NH1GG40V35	J223706	280	3
1	400	50	4.5	1A151.	NH1GG40V50	K223707	280	3
1	400	63	5.7	1A155.	NH1GG40V63	L223708	280	3
1	400	80	5.5	1A159.	NH1GG40V80	M223709	280	3
1	400	100	7.0	1A163.	NH1GG40V100	N223710	280	3
1	400	125	9.1	1A165.	NH1GG40V125	P223711	300	3
1	400	160	13.0	1A169.	NH1GG40V160	Q223712	300	3
1	400	200	13.1	1A171.	NH1GG40V200	R223713	300	3
1	400	224	15.1	1A173.	NH1GG40V224	S223714	300	3
1	400	250	16.9	1A175.	NH1GG40V250	T223715	300	3
2	400	35	3.9	1A245.	NH2GG40V35	T227257	187	3
2	400	50	4.5	1A251.	NH2GG40V50	V227258	187	3
2	400	63	5.7	1A255.	NH2GG40V63	W227259	187	3
2	400	80	6.1	1A259.	NH2GG40V80	F223726	320	3
2	400	100	7.3	1A263.	NH2GG40V100	G223727	320	3
2	400	125	9.1	1A265.	NH2GG40V125	H223728	320	3
2	400	160	13.0	1A269.	NH2GG40V160	J223729	320	3
2	400	200	13.5	1A271.	NH2GG40V200	K223730	320	3
2	400	224	15.1	1A273.	NH2GG40V224	L223731	320	3
2	400	250	18.0	1A275.	NH2GG40V250	M223732	320	3
2	400	315	19.9	1A279.	NH2GG40V315	N223733	400	3
2	400	355	22.7	1A281.	NH2GG40V355	P223734	400	3
2	400	400	28.0	1A283.	NH2GG40V400	Q223735	400	3
3	400	250	19.9	1A375.	NH3GG40V250	R223736	450	1
3	400	315	22.7	1A379.	NH3GG40V315	S223737	450	1
3	400	400	28.0	1A383.	NH3GG40V400	T223738	450	1
3	400	500	30.8	1A387.	NH3GG40V500	V223739	600	1
3	400	630	43.0	1A389.	NH3GG40V630	W223740	600	1

IEC Low Voltage General Purpose Protection

NH fuse-links Plain blades

Sizes 000 to 3 gG 400VAC from 2 to 630A

Dimensions (mm)

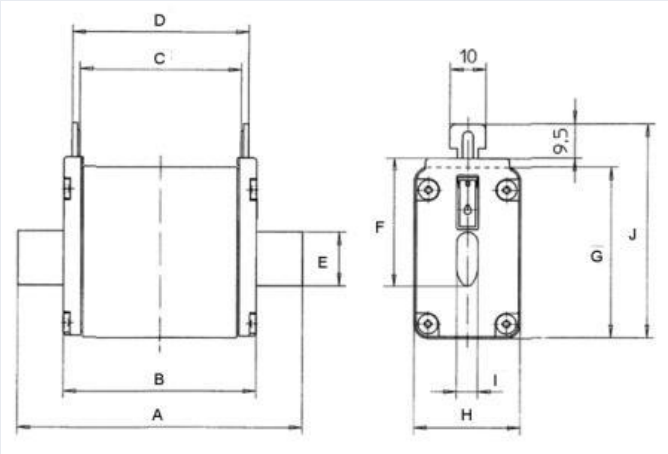

Size	Nominal Current (A)	A	B	C	D	E	F	G	H	I	J
000	2-100	79	52	45.5	49.5	15	35	40.5	20.8	6	52.5
00	125-160	79	52.8	45	50	15	35	47.5	29.5	6	59.5
1	16-125	135	70.8	63	68	20	40	47.5	29.5	6	64.5
1	160-250	135	70.8	63	68	20	40	52.5	39.5	6	64.5
2	16-250	150	72.3	63	68	20	40	52.5	39.5	6	72.5
2	300-500	150	72.3	63	68	26	48	60	51	6	72
3	250-400	150	72.3	63	68	26	60	60	51	6	83.5
3	425-800	150	72.3	63	68	33	60	74	70	6	86
4	400-1250	200	85	62	68	49	86	108	90	8	117.5
4a	500-1250	200	85	84	90	49	86	108	90	6	117.5

IEC Low Voltage General Purpose Protection

NH fuse-links Plain blades

Sizes 000 to 3 gG 400VAC from 2 to 630A

Time current characteristics

Actual prearcing time (s)

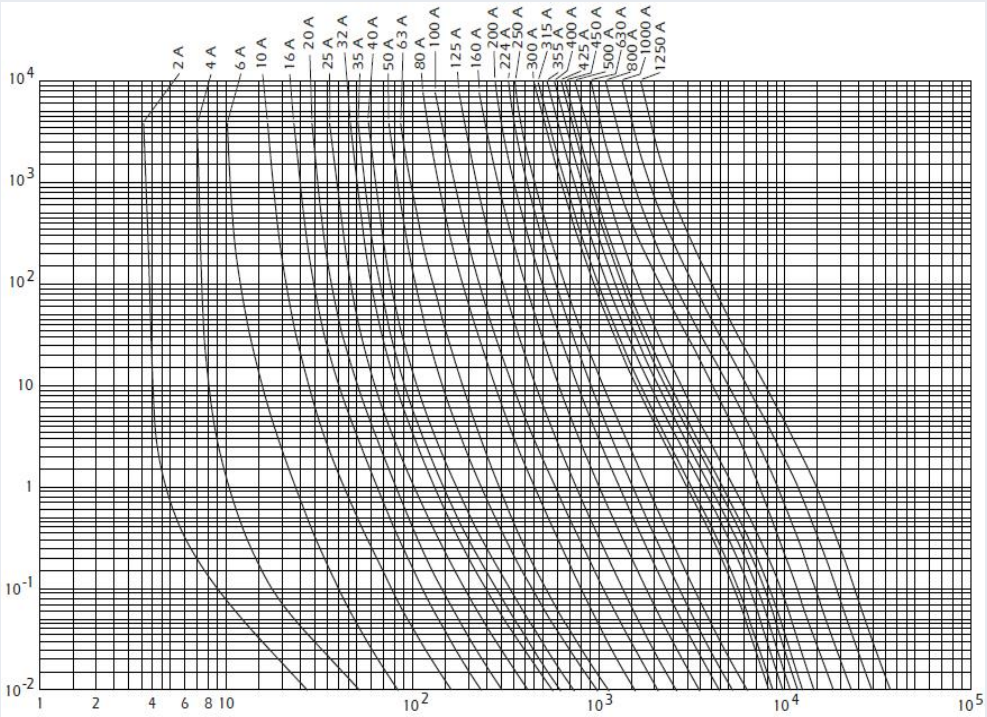

rms value of prearc current (A) ± 10%

Characteristics I²t

Prearcing and Clearing I²t (A²s)

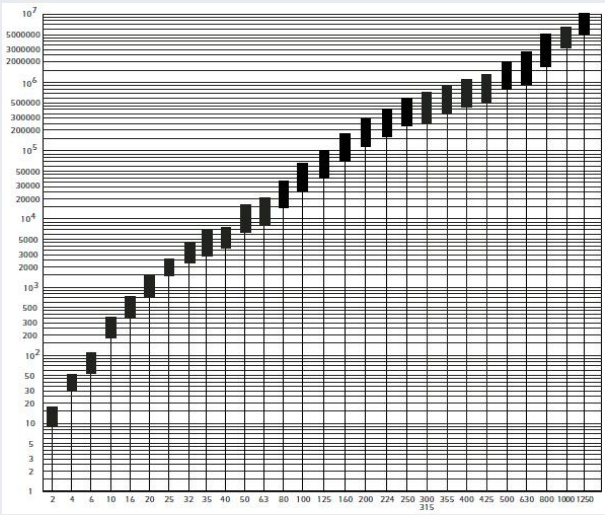

Nominal Current (A)

Peak let thru characteristics

Maximum peak let thru current (A)

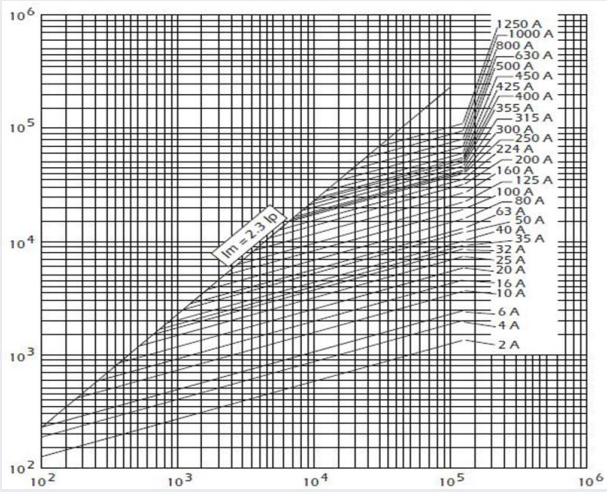

50 Hz rms symetrical prospective current (Ip) (A)